MAGUIRE
Product Technical Data Sheet

WSB 460
Gravimetric Blender

Design

The Maguire Weigh Scale Blender™ (WSB) range of gravimetric batch blenders are for all plastics converting businesses for all types of extrusion applications, and also all Injection and Blow Moulding applications.

The WSB 460 is part of the 400 Series range consisting of 1 hopper fitted with 6 material compartments.

Operation

Each material is dosed by a stainless steel slide gate. The slide Gate is capable of dosing a wide ranger of settings, from as little as 1% to 100%, based on an average density free flowing material (0.65 BD).

For enhanced accuracy and consistency on small percentage settings (1% to 4%) a Slide Gate Restrictor (SGR-1) is recommended to restrict the opening of the gate by 50%- this reduces flow and enhances control.

The hoppers are mounted above the Weigh Bin with a default 4000g batch size.

In normal operation the system tares the weight of the weigh bin and then each material is dispensed - Regrind, Natural, Colour and Additive in sequence, weighing each material after each dispense confirming material required before moving on to the next material.

The complete batch is released into the mixing chamber, and mixed with the previous batch to ensure a homogenous mix.

Material blending is controlled by a level sensor mounted in the upper part of the mix chamber.

When the sensor is covered the blender will not dispense any further batches. The level of material in the mix chamber is critical to good mixing.

As material in the mix chamber is consumed the sensor is uncovered and then the blender then commences the next cycle.

Control

The WSB Controller has 124 standard features and functions that technically make it lead the industry regarding blending control.

Key to this is the continuous calibration of materials ensuring accurate dispenses of every material within the blend.

The Controller every dispense updates the gram/second flow rate of each material, ensuring consistent accuracy.

Settings are made easily by either user friendly thumbwheels, or entering settings directly on the keypad.

For special functions these can be easily accessed and set via the password protected keypad.

There is audible alarm and strobe light with silence function, should a batch be incomplete, for example running out of additives or masterbatches.

Setup and Operation reports can be printed direct to a USB key.

Data is also available via Ethernet or serial ports, allowing remote access and monitoring to download settings and check job progress.

Integration to other control or ERP systems can be made via leading fieldbuses or OPC interfaces

MAGUIRE
Product Technical Data Sheet

WSB 460
Gravimetric Blender

Dimensions

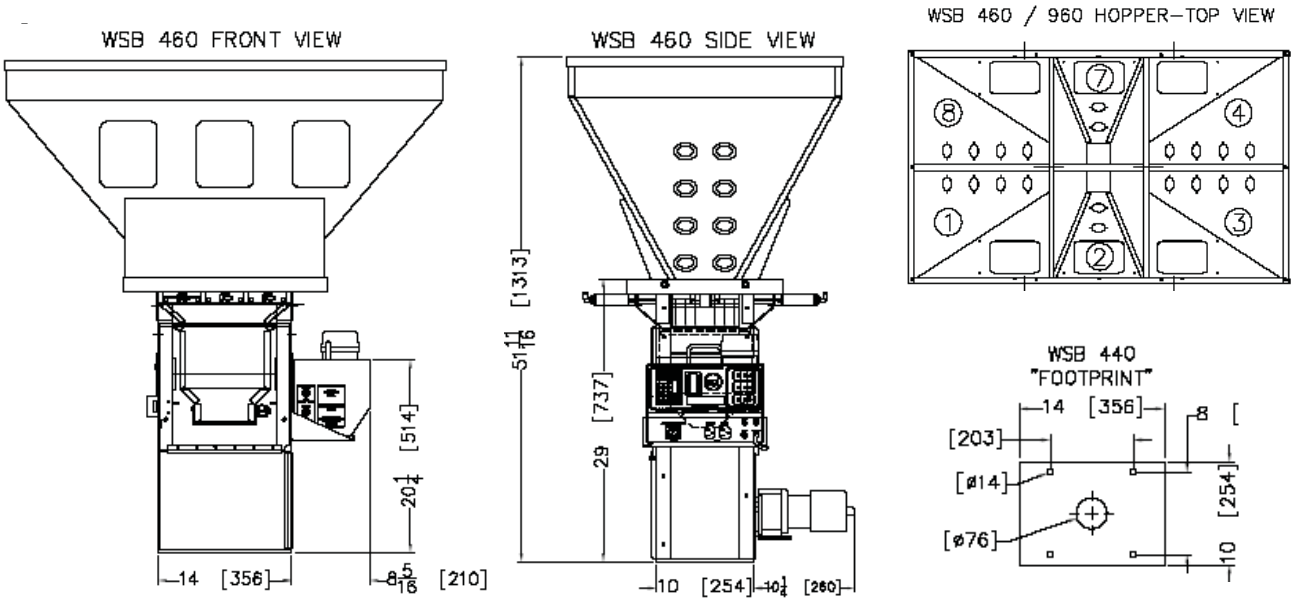

Key Features

Ideal for Large processing machines

Reduced weight and footprint

Overall precision of ±0.1% of specified blend

Compressed air gun for quick cleanout included

Easy access to all material contact surfaces of the machine including hoppers, weigh bin, and mixing chamber permits rapid colour change without the use of tools

Proprietary microprocessor-control technology monitors and confirms the weight of each ingredient / touch-screen optional.

Compensation is made when a variation in dispense weight is detected

Vibration Weighing management

Improved documentation capabilities

5 Year Warranty

Distributed by
Dri-Air Industries

Technical Data

Model	WSB 460
Maximum Throughput**	380kg/h to 500kg/h 830lb/h to 1,100lb/h
Number of Materials	6
Material Dispense Systems	6-2"x3" Slide Gate
Weight	134kg 295b
Power Supply	120vac - 4.8 Amp 230vac - 2.7 Amp
Operating Air Pressure	4-6 Bar 60-90psi
Air Consumption	0.3 m³/hr 0.17cfm
** Throughput achieved is influenced by number of materials, how well they flow, vibration and loading consistency - each can effect maximum output of a blender, which in turn effects sizing the correct blender required for an application.	
Shipping Weight	180Kg 400b
H x W x D	147 x 140 x 82cm 58 x 55 x 32.5in
Maguire reserves the right to change technical data without prior notice	