	220V
FU1	10A
FU2	10A
FU3	0.5A

ALL FUSES ARE QUICK BLOW FUSES.

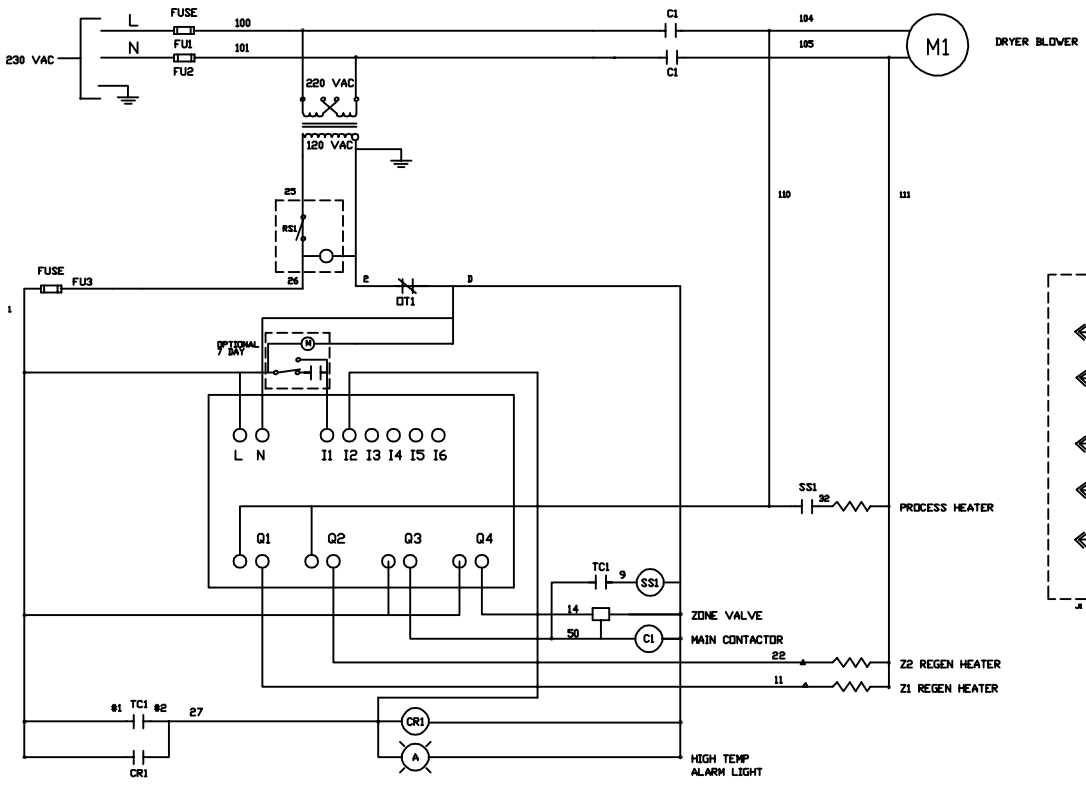

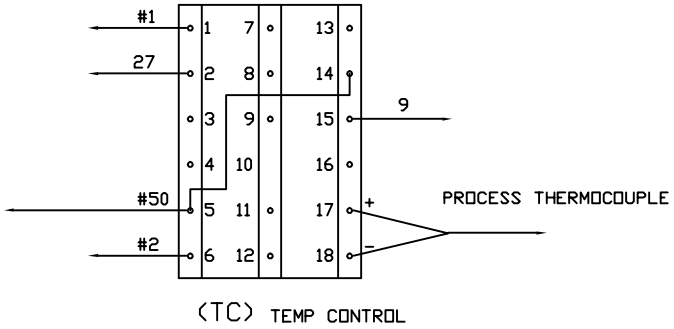

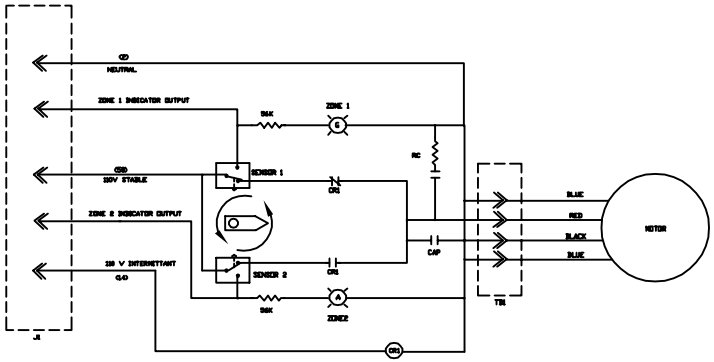

This print property of Dri-Air Industries Inc. The information is sumitted in confidence.

TOLERANCES UNLESS OTHERWISE SPECIFIED	
FRACTIONS	±1/32
ANGLES	±30'
DECIMALS	X±.030
	XX±.010
	XXX±.005
REMOVE ALL BURRS AND SHARP CORNERS DO NOT SCALE DWG.	
FINISH	

DRI-AIR INDUSTRIES INC.

DRAWN	CHK'D	APP'D	DATE	SCALE
COURVILLE		JASON	3/22/05	N/A

TITLE
ARID-X 10C , AHM-1C
230 VOLT

SHEET	REV	DRAWING NO.	SIZE
1 OF 1	—	85258	D

REV	DATE	DESCRIPTION	BY	APP