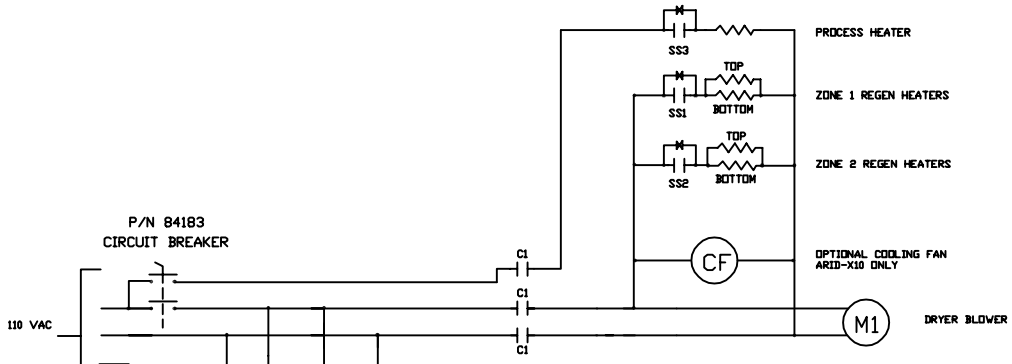

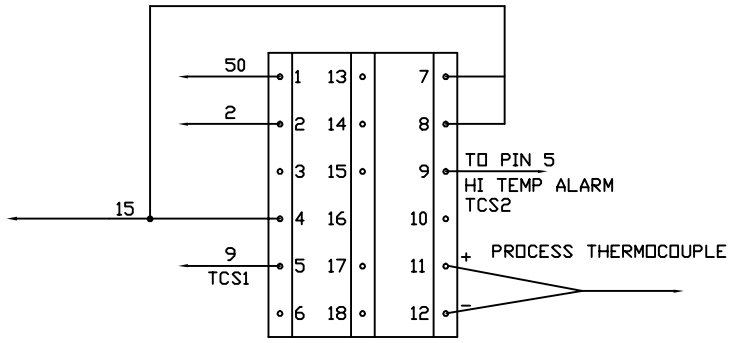

(TC) TEMP CONTROL P/N 84016
(TS) TOGGLE SWITCH P/N 80466
(DT1) SNAP DISC THERMOSTAT P/N80221
(TCS) TEMP CONTROL SWITCH
(CF) COOLING FAN P/N 84079
(C1) POWER RELAY
(SS) SOLID STATE RELAY

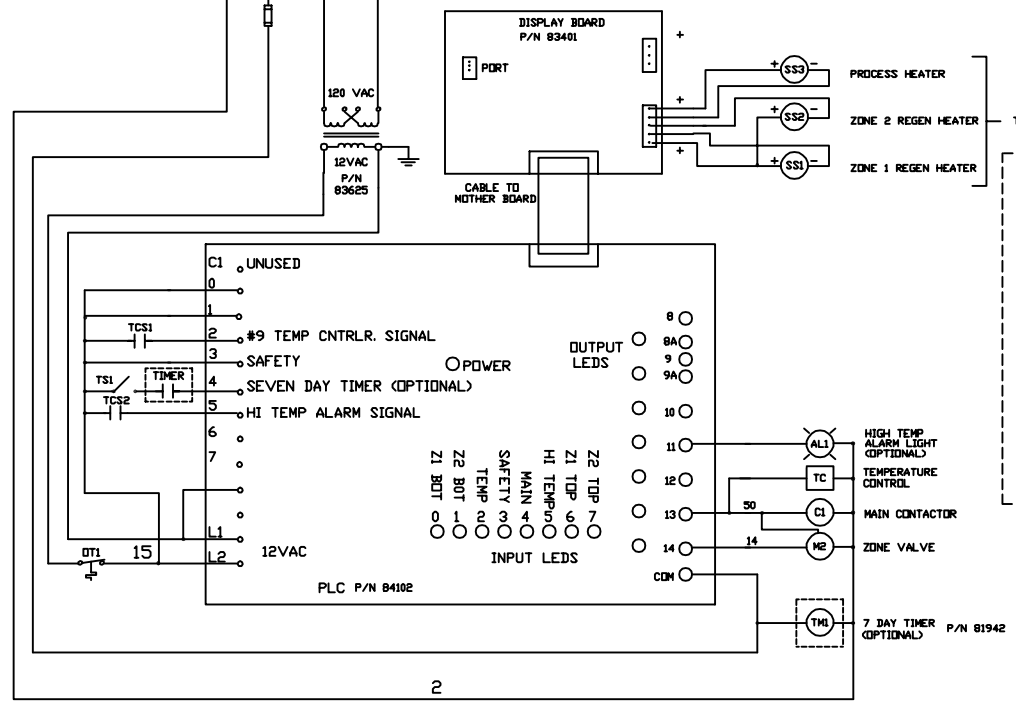

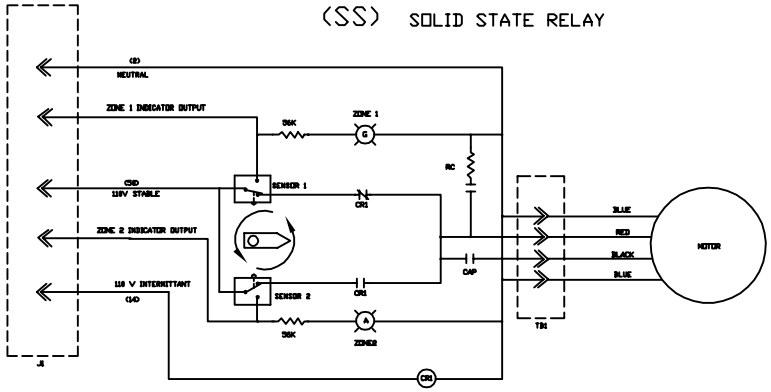

ROTARY AIR VALVE P/N 83705

REV	DATE	DESCRIPTION	BY	APP
C	3/29/03	UPDATED	BC	JIM
B	1/22/03	UPDATED	BC	CS
A	8/5/03	UPDATED	BOB	PETE

This print property of Dri-Air Industries Inc. The information is sumitted in confidence.

TOLERANCES UNLESS OTHERWISE SPECIFIED
FRACTIONS ±1/32
ANGLES ±30'
DECIMALS .XX±.030 .XXX±.015 .XXXX±.005
REMOVE ALL BURRS AND SHARP CORNERS
DO NOT SCALE DWG.
FINISH

DRI-AIR INDUSTRIES INC.

DRAWN	CHK'D	APP'D	DATE	SCALE
DIBIASI		DIBIASI	8/9/02	N/A

TITLE ARID-X-10-B,AHM-1 120 VAC 1Ø
W/ SEVEN DAY TIMER
REV. C EXPANDER BOARD

SHEET	REV	DRAWING NO.	SIZE
1 OF 1	C	84834	D